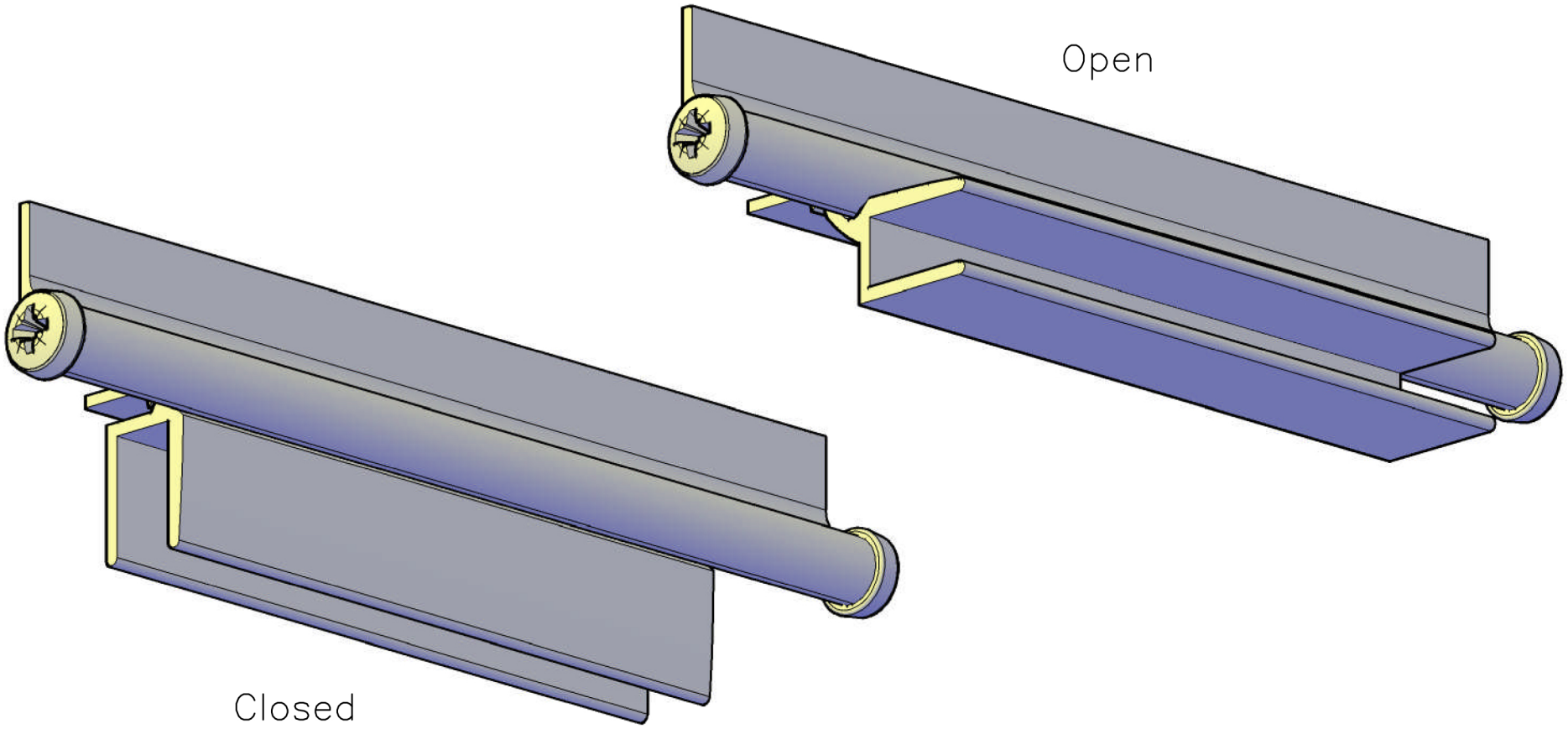
Open
Closed