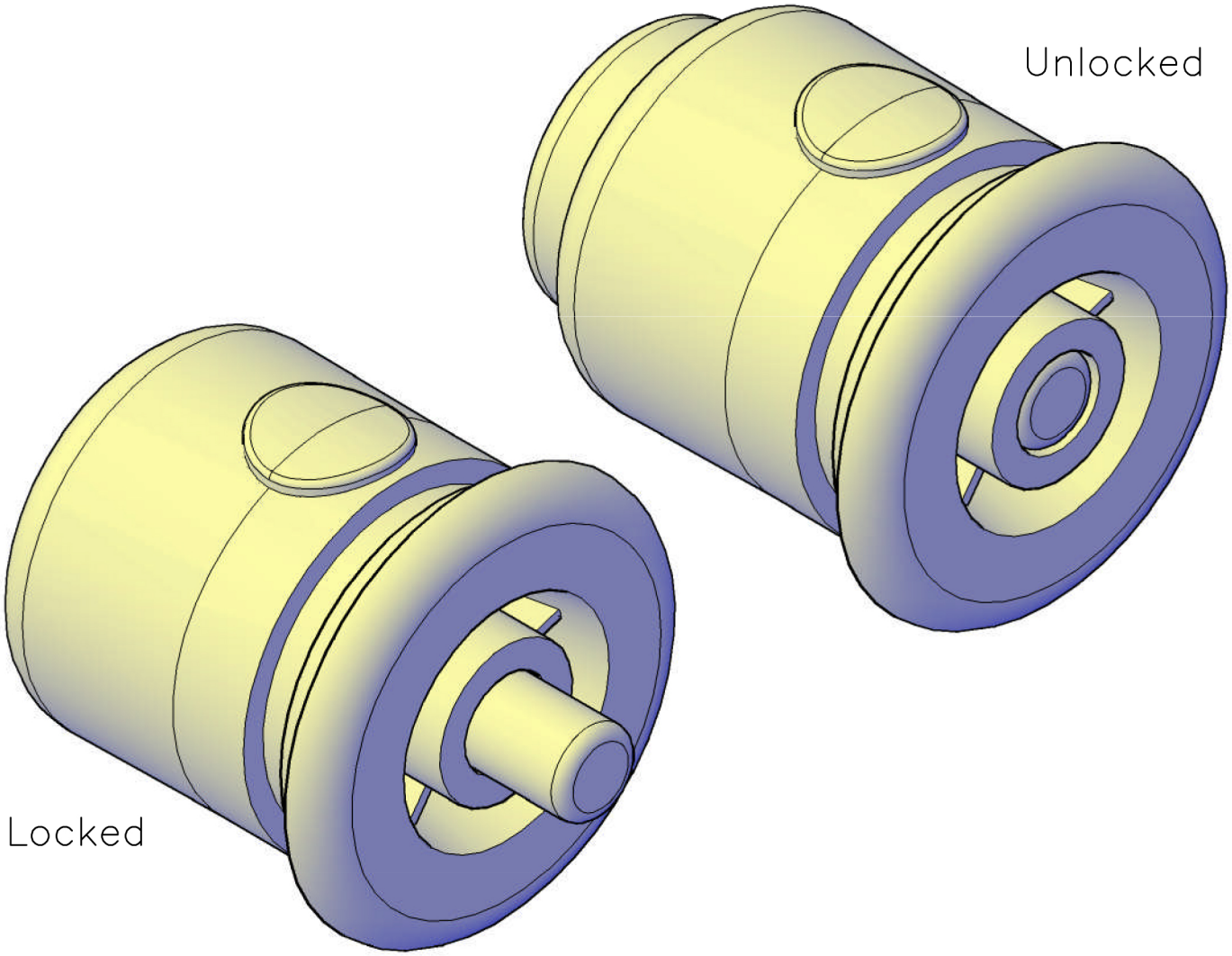
Unlocked
Locked